Rating	15A 12V/24VDC	Circuit Diagram
Insulation Resistance	DC 500V 100M ohm Min.	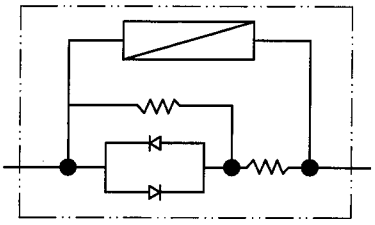
Dielectric Strength	AC 1000V 1 minute	
Operation Temperature	-20°C~85°C	
FUSE	ATO BLADE FUSE	

Material:
Body: PVC(T105°C), Black.

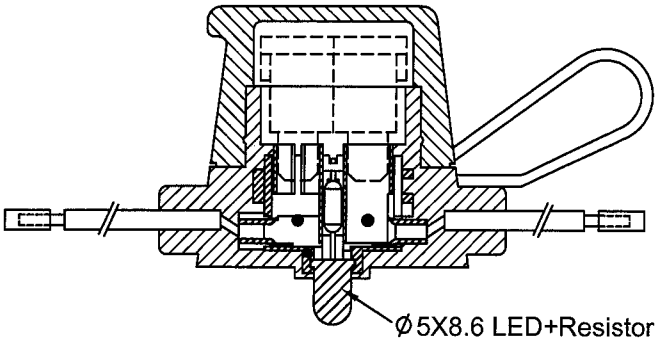

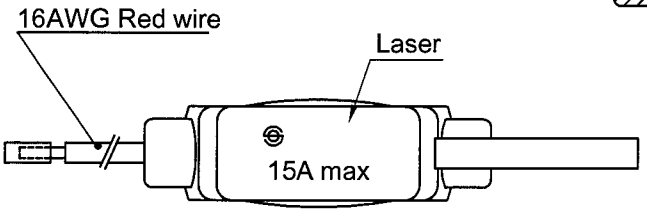

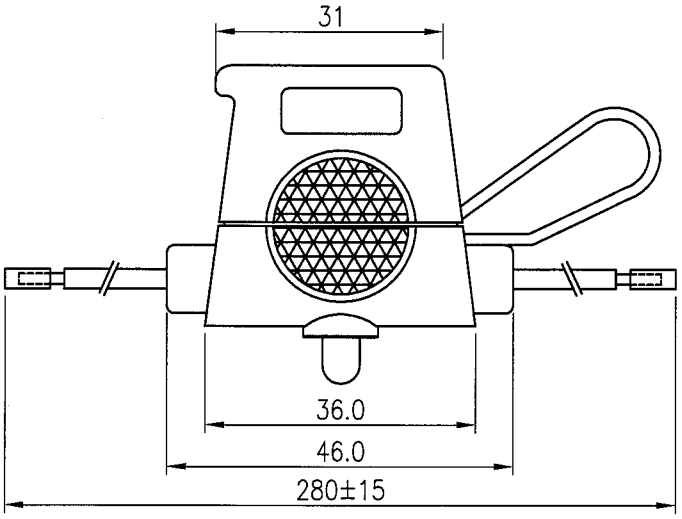

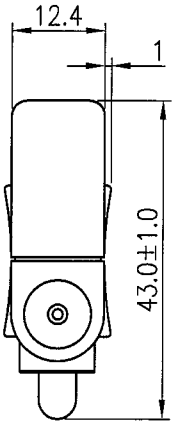

原稿
2015.4.11
研發部

Tolerances ±0.5 Unless Otherwise Specified

							△
							△
Date	Name	Description					NO
Drawn	Checked	Approved	SCI BOM NO.	1310267	Model Name	IN-LINE FUSE HOLDERS	
曹盈芳		王伯山	Customer No.		Model No.	SFR3-59-11C-2L	Rev.
04/02/'15		4/2/15	Unit	mm	SWEETA PRODUCTS CORPORATION		0