Rating	12A 125V 6A 250VAC	**Mounting Hole**	**Circuit Diagram**
Contact R	50m ohm Max.		
Insulation R	DC 500V 100M ohm Min.		
Dielectric Strength	AC 1500V 1 minute		
Operation Temperature	−20°C~85°C		
Circuit	6P DPDT (ON)−OFF−(ON)		

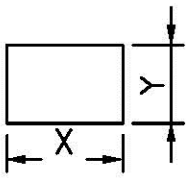

Thickness	X	Y
0.75...1.25	19.2−0.1	13+0.1
1.25...2	19.4−0.1	13+0.1
2...4	19.8−0.1	13+0.1

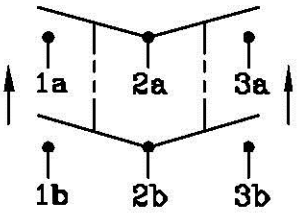

*MATERIAL:
Frame: Black, Nylon 66 (94−V2)
Actuator: Black, Nylon 66 (94−V2)
Terminals: Copper alloy
Contacts: Copper alloy
Printed: None

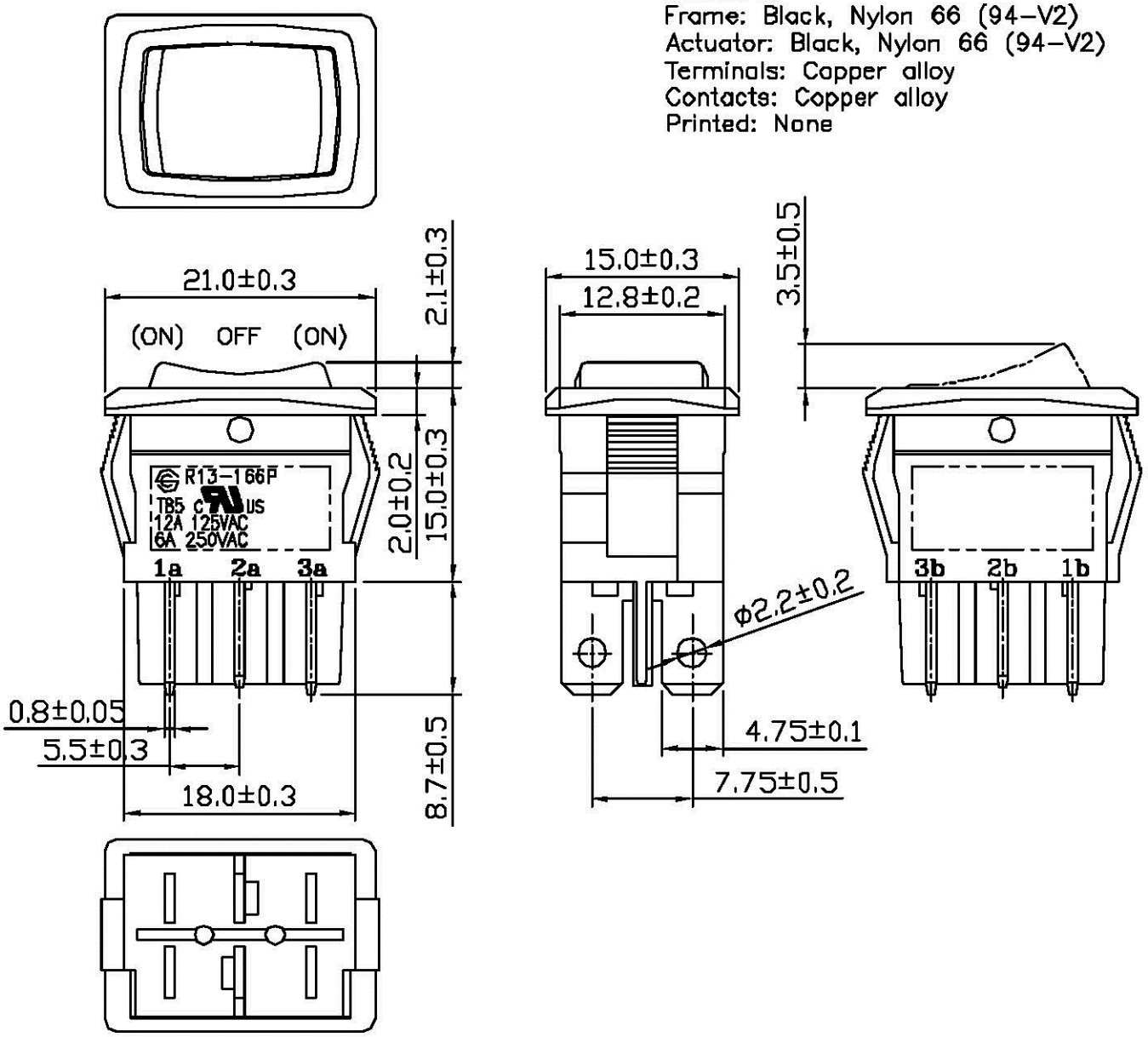

							△
							△
Date	**Name**	**Description**				REV. 0	**NO**
Drawing	**Check**	**Approval**	**SCI No.**	1823820	**Model Name**	ROCKER SWITCH	
B.S.Wang	王 佰 山	李 景 煌	**Customer No.**		**Model No.**	SR13−166PK−02	
01/03/'07	01/03/'07	01/03/'07	**Unit**	mm	**SWEETA PRODUCTS CORPORATION**		